Datasheet LCA-4K-1G

Ultra-Low-Noise Current Amplifier

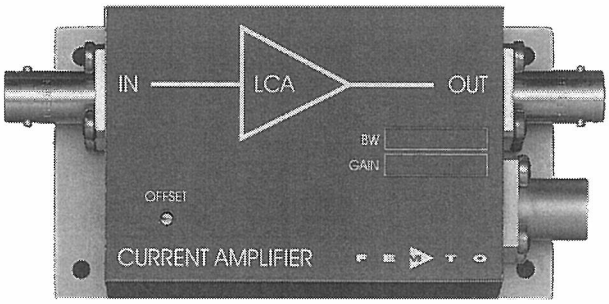

Features	• **Bandwidth and Frequency Response Independent of Detector-Capacitance (up to 10 nF)** • **Extremely Low Noise, 6.5 fA/√Hz Equivalent Input Noise Current** • **Bandwidth DC ... 4 kHz** • **Transimpedance (Gain) 1 x 10^9 V/A**
Applications	• **Photodiode- and Photomultiplier-Amplifier** • **Spectroscopy** • **Charge-Amplifier** • **Ionisation Detectors** • **Preamplifier for Lock-Ins, A/D-Converters, etc.**

Specifications	*Test Conditions*	*Vs = ± 15 V, Ta = 25°C*
Gain	Transimpedance	1 x 10^9 V/A (>10 kΩ Load)
	Accuracy	± 1%
Frequency Response	Lower Cut-Off Frequency	DC
	Upper Cut-Off Frequency	4 kHz (- 3 dB)
	Rise- / Fall-Time	100 µs (10% - 90%)
	Gain Flatness	± 0.1 dB
Input	Equ. Input Noise Current	6.5 fA/√Hz (@ 1 kHz)
	Equ. Input Noise Voltage	5 nV/√Hz (@ 1 kHz)
	Input Bias Current	2 pA typ.
	Input Bias Current Drift	Factor 1.7 / 10 K
	Offset Current Compensation	± 3 nA, Adjustable by Offset-Trimpot
	Max. Input Current	± 10 nA (Linear Amplification)
	Input Offset Voltage	< 1 mV
	DC Input Impedance	50 Ω (Virtual) // 5 pF
Output	Output Voltage	± 10 V (>10 kΩ Load)
	Output Impedance	50 Ω (Terminate with >10 kΩ for best Performance)
	Max. Output Current	± 10 mA (Linear Amplification)
Power Supply	Supply Voltage	± 15 V
	Supply Current	± 40 mA typ.
Case	Weight	210 gr. (0.5 lbs)
	Material	AlMg4.5Mn, nickel-plated
Temperature Range	Storage Temperature	-40 ... +100 °C
	Operating Temperature	0 ... +60 °C
Absolute Maximum Ratings	Input Voltage	± 5 V
	Power Supply Voltage	± 22 V

Ultra-Low-Noise Current Amplifier

Connectors	Input	BNC
	Output	BNC
	Power Supply	LEMO Series 1S, 3-pin Fixed Socket Pin 1: + 15V Pin 2: - 15V Pin 3: GND

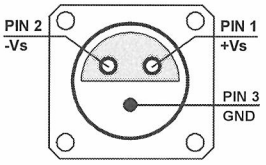

Application Diagrams

Photo Detector Biasing in Photovoltaic Mode:
Use for Low Speed Applications and Minimum Dark Current.

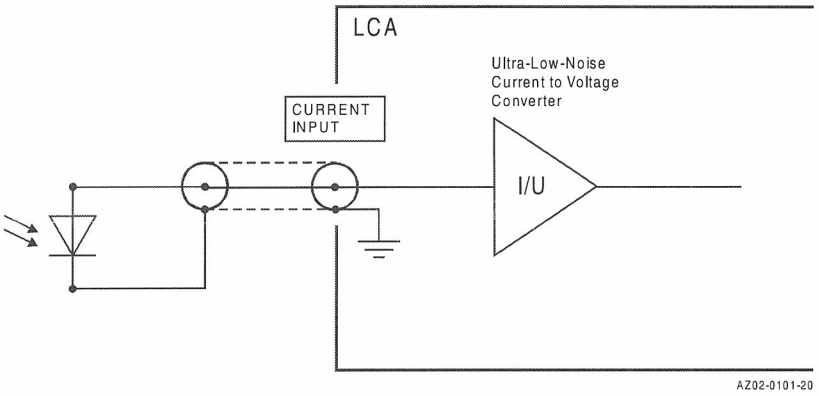

Photo Detector Biasing in Photoconductive Mode:
Use for Fast Applications and if More Dark Current is Tolerable.
Bias Voltage Decreases Detector Capacitance.

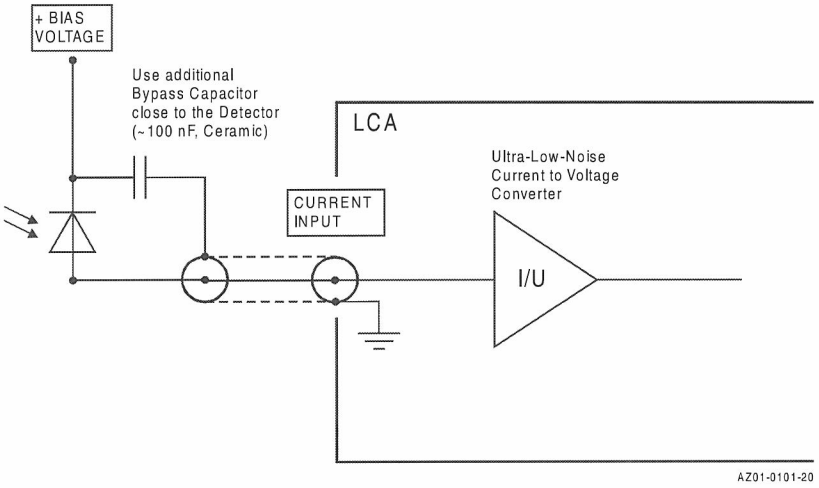

Ultra-Low-Noise Current Amplifier

Dimensions

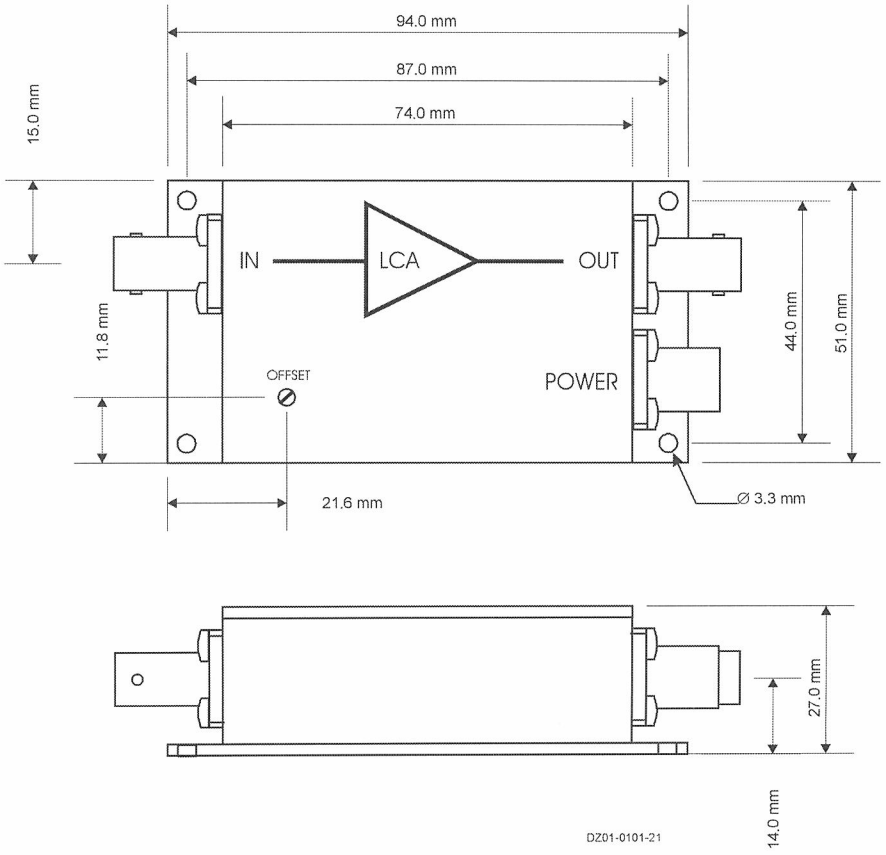

FEMTO Messtechnik GmbH
Paul-Lincke-Ufer 34
D-10999 Berlin · Germany
Tel.: +49 (0)30 – 4 46 93 86
Fax: +49 (0)30 – 4 46 93 88
e-mail: info@femto.de
http://www.femto.de